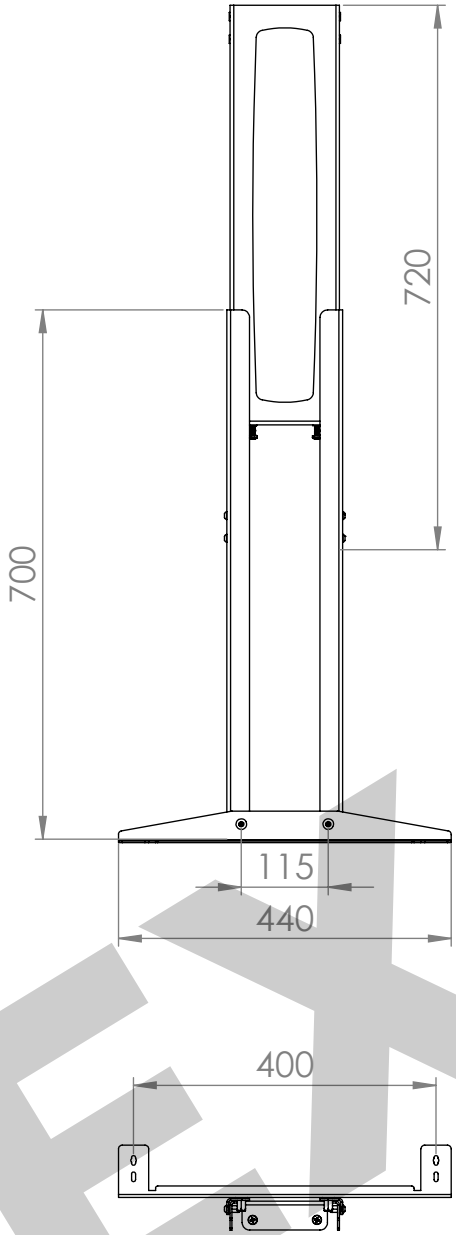

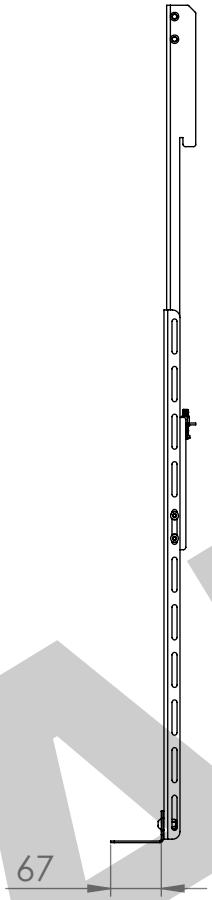

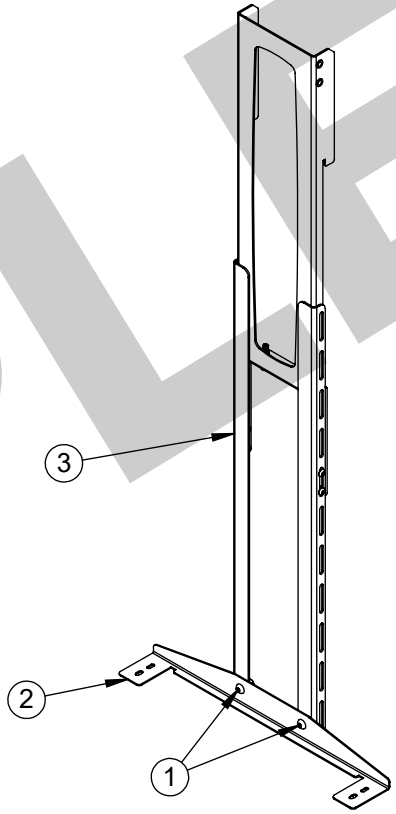

BOM Table			
NO	Part Number	Description	QTY.
1	BH-MET-8X20-HT-BO	Button Head Screw M8 X 20 (High Tensile Black Oxide)	2
2	PAR--2069870	SBM 0066 Sound bar mount Cisco Room Bar Pro	1
3	ASS--20054019	SBM Universal soundbar PZX9	1

Description	SBM9 Sound bar mount for Cisco Room Bar Pro

UNLESS OTHERWISE SPECIFIED:
DIMENSIONS ARE IN MILLIMETERS

SURFACE FINISH: Powder Coated

Created By Andrew Griffiths

Unicol Engineering
Green Road
Oxford OX3 8EU

Saved Date: 21 October 2025
Created Date: 21 October 2025
Bend Tool:
Material:
Gauge:

DRW - REV
REV -

See Below - Special Notes

Part Number & Part Revision
ASS--20064108 REV -

WEIGHT: 3.19 Kg

SCALE:1:10 DO NOT SCALE DRAWING SHEET 1 OF 1

EXAMPLE