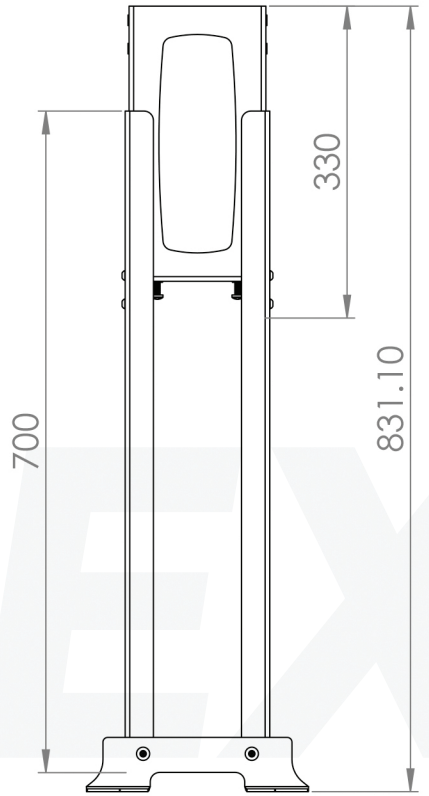

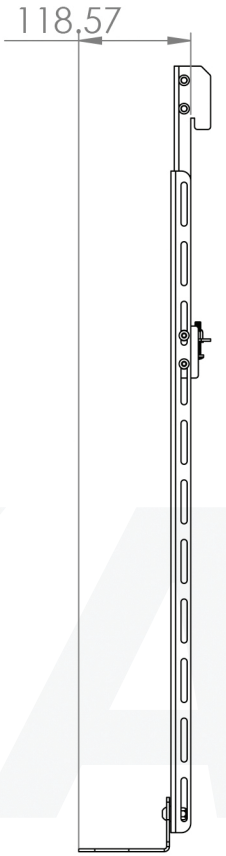

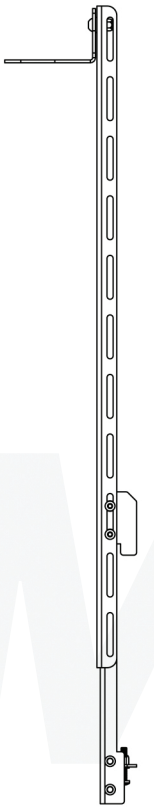

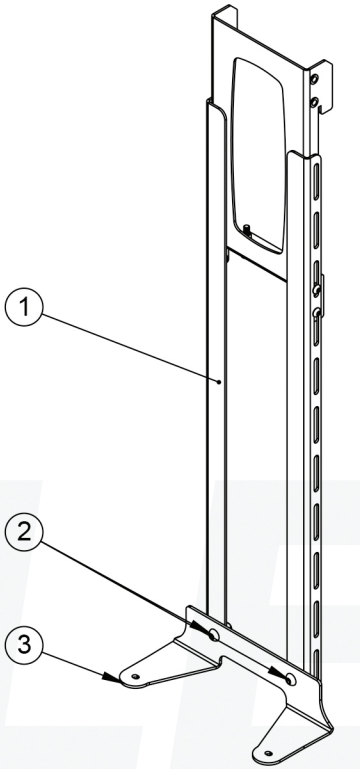

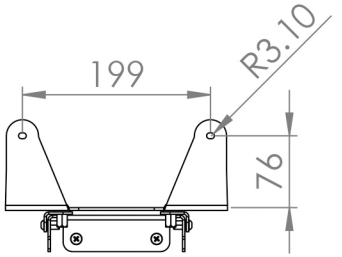

BOM Table			
NO	Part Number	Description	QTY.
1	ASS--20053940	Universal soundbar PZX mount	1
2	BH-MET-8X20-HT-BO	Button Head Screw M8 X 20 (High Tensile Black Oxide)	2
3	ASS--20056670	SBM0028 Soundbar Mount Logitech Rally Mini camera	1

Description	SBM10028 Soundbar Mount Logitech Rally Mini camera		
UNLESS OTHERWISE SPECIFIED: DIMENSIONS ARE IN MILLIMETERS SURFACE FINISH: Powder Coated	Saved Date: 14 August 2025 Created Date: 14 August 2025 Bend Tool:	DRW - REV REV - A-002	See Below - Special Notes Reuse sound bars own fixings
Created By Tim Smith	Material:		
Unicol Engineering Green Road Oxford OX3 8EU	Gauge:		Part Number & Part Revision ASS--20056669 REV - A-002
	WEIGHT: 2.51 Kg		SCALE:1:8 DO NOT SCALE DRAWING SHEET 1 OF 1

EXAMPLE